HACCESS®
PERSONNALISE VOTRE HÔTEL

Haccess offers you the equipment of your bathroom, shower, mirrors, accessories, hairdryer and complements.

RECTANGULAR SOAP & BOTTLE SHELF PROJECT

Rectangular soap & bottle shelf, chrome brass.
Mitre cut square tube.
Solid chrome brass end-pieces.
Invisible screws.
Solid brass support plate with stainless steel hex locking screw.
2 fixing points per support plate, oblong holes.
Stainless steel screws and wall plugs included.
Chrome warranty 5 years.

Ref : PRO.588.21.CHR

TECHNICAL FEATURES	
Dimensions	220 x 33 x 98 mm
Materials	Brass
Finishing	Chrome

Haccess offers you the equipment of your bathroom, shower, mirrors, accessories, hairdryer and complements.
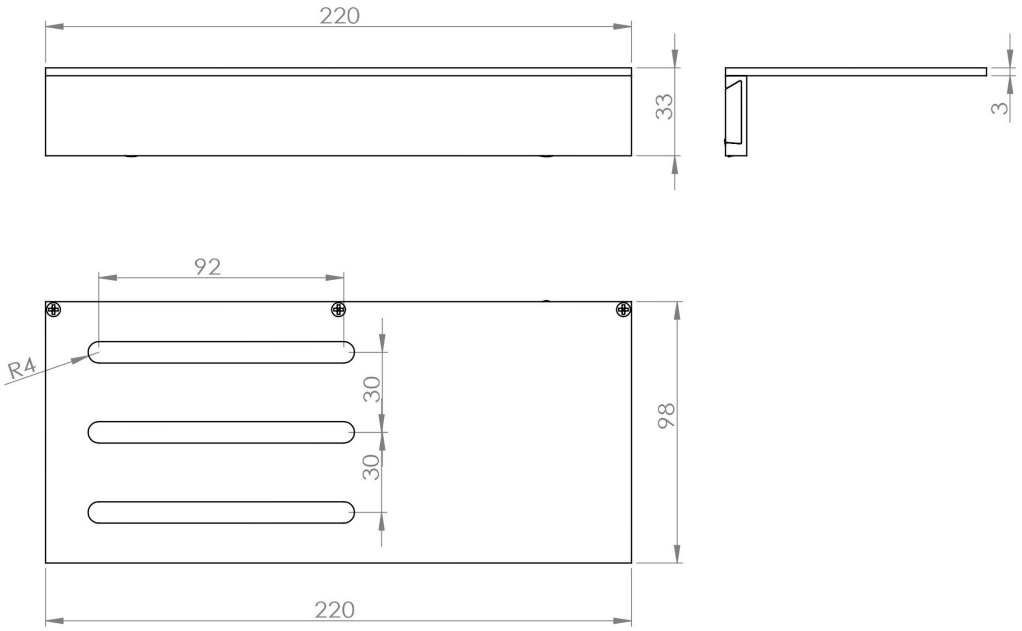
PRO.588.21.CHR : RECTANGULAR SOAP & BOTTLE SHELF PROJECT