HACCESS®
PERSONNALISE VOTRE HÔTEL

Haccess offers you the equipment of your bathroom, shower, mirrors, accessories, hairdryer and complements.

SMALL CORNER SOAP BASKET CHROME BRASS

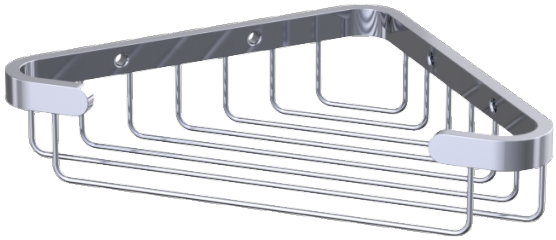

Small corner soap basket, chrome brass.
Invisible screws : screw covers included.
4 fixing points.
Stainless steel screws and wallplugs included.
Chrome warranty 5 years.

Ref : HOS.797.50.CHR

TECHNICAL FEATURES	
Dimensions	220 x 35 x 125,5 mm
Materials	Brass
Finishing	Chrome

Haccess offers you the equipment of your bathroom, shower, mirrors, accessories, hairdryer and complements.
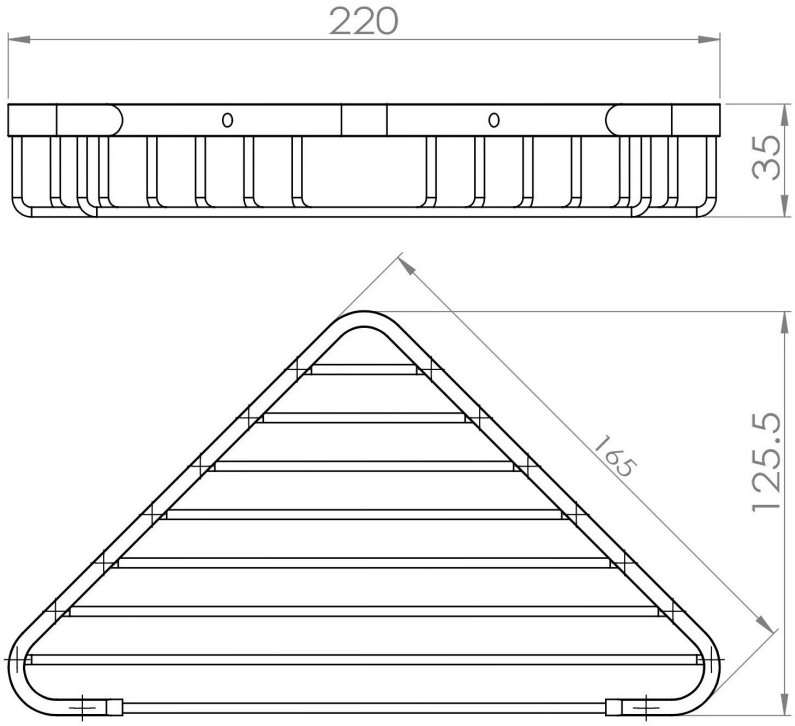
HOS.797.50.CHR : SMALL CORNER SOAP BASKET CHROME BRASS