HACCESS®
PERSONNALISE VOTRE HÔTEL

Haccess offers you the equipment of your bathroom, shower, mirrors, accessories, hairdryer and complements.

# TOILET PAPER DISPENSER Ø260 MM BRUSHED SS

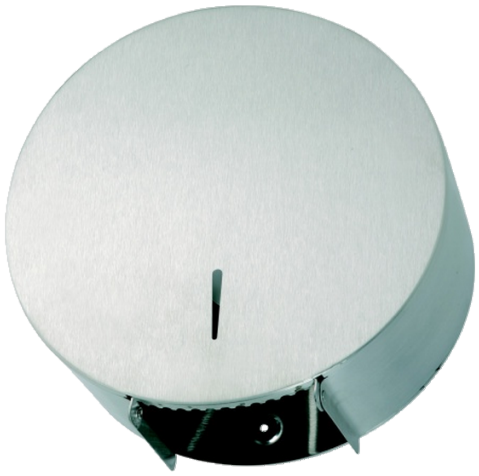

Toilet paper dispenser Ø260 mm, brushed stainless steel.
Mandrel diameter : 50 mm.
Maximum paper roll diameter : 240 mm.
Stainless steel screws included.

Ref : EXE.990.11.INO

| TECHNICAL FEATURES | |
|---|---|
| **Dimensions** | 260 x 282 x 117 mm |
| **Materials** | Stainless steel |
| **Finishing** | Brushed |
| **Option on request 1** | Polished finish : EXE.940.11.CHR |

Haccess offers you the equipment of your bathroom, shower, mirrors, accessories, hairdryer and complements.
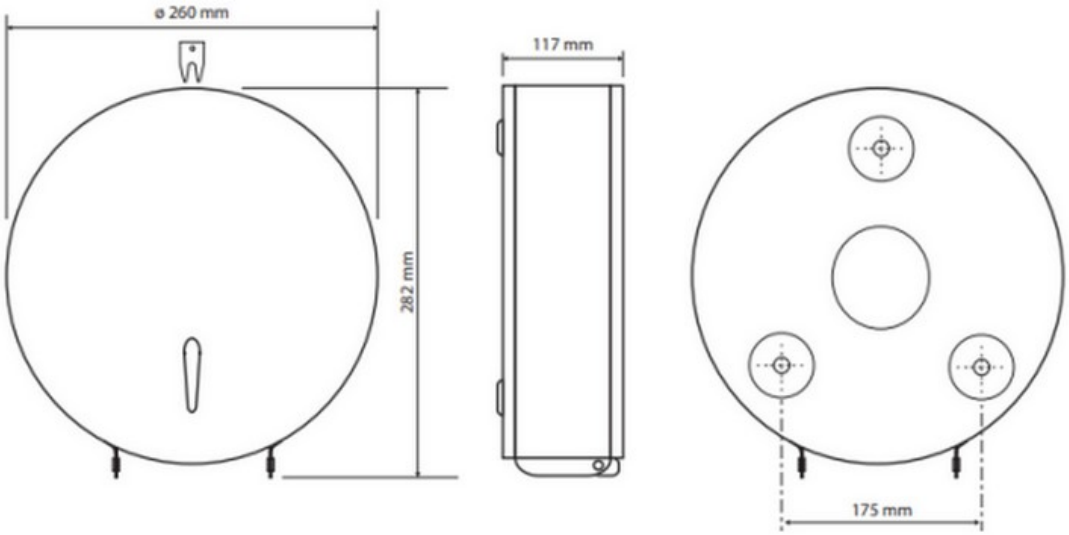
# EXE.990.11.INO : TOILET PAPER DISPENSER Ø260 MM BRUSHED SS