Haccess offers you the equipment of your bathroom, shower, mirrors, accessories, hairdryer and complements.

RECTANGULAR TISSUE BOX ELYSEUM GOLD – TO STAND

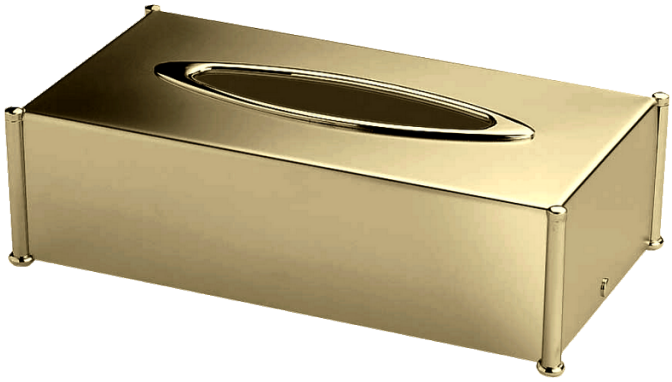

Rectangular tissue box, gold brass.
To stand only.
Suitable for standard tissue boxes refills.

Ref : ELY.930.88.2.DOR

TECHNICAL FEATURES	
Dimensions	255 x 75 x 145 mm
Materials	Brass
Finishing	Gold

HACCESS®
PERSONNALISE VOTRE HÔTEL

Haccess offers you the equipment of your bathroom, shower, mirrors, accessories, hairdryer and complements.

ELY.930.88.2.DOR : RECTANGULAR TISSUE BOX ELYSEUM GOLD – TO STAND

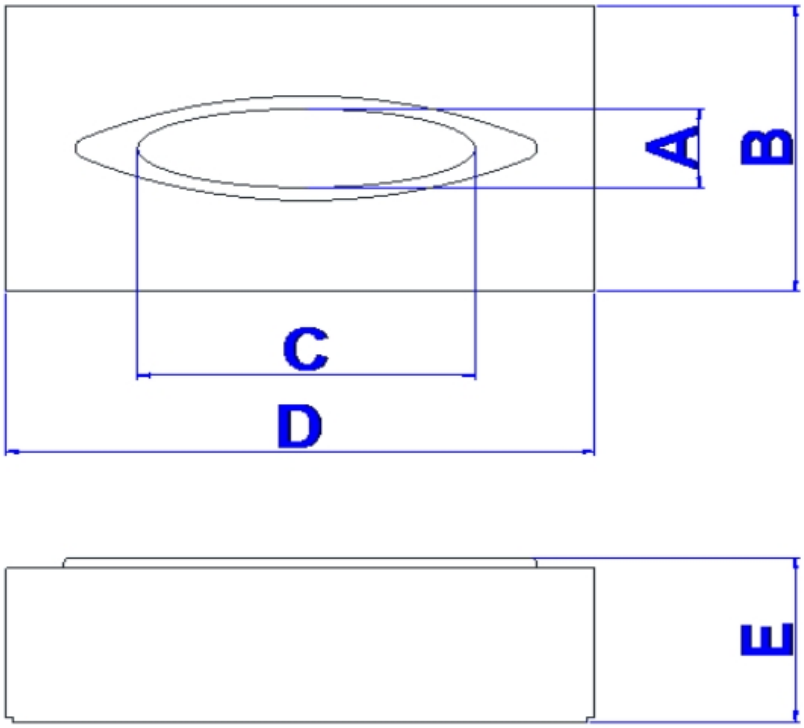

A: 38 mm B: 145 mm C: 130 mm
D: 255 mm E: 75 mm