HACCESS®
PERSONNALISE VOTRE HÔTEL

Haccess offers you the equipment of your bathroom, shower, mirrors, accessories, hairdryer and complements.

SOAP DISH HOLDER ELYSEUM GOLD

Soap dish holder, gold PVD brass wall support.
Safety frosted glass dish.
Invisible screws. Solid brass support plate with stainless steel hex locking screw.
2/4 fixing points per support plate, oblong holes.
Solid brass end-pieces and screw covers.
Stainless steel screws and wall plugs included.

Ref : ELY.2061.86.DOR

TECHNICAL FEATURES	
Dimensions	173 x 61 x 117 mm
Materials	Brass/Safety glass
Finishing	Gold / Frosted glass

Haccess offers you the equipment of your bathroom, shower, mirrors, accessories, hairdryer and complements.
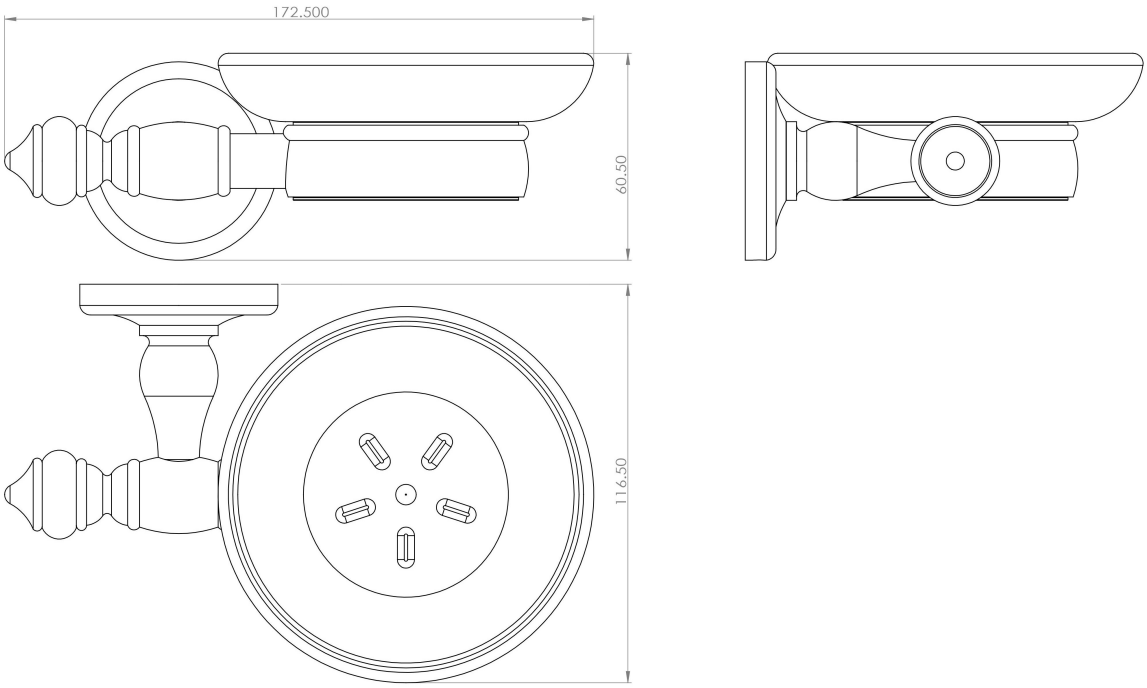
ELY.2061.86.DOR : SOAP DISH HOLDER ELYSEUM GOLD