HACCESS®
PERSONNALISE VOTRE HÔTEL

Haccess offers you the equipment of your bathroom, shower, mirrors, accessories, hairdryer and complements.

# GLASS SHELF HOLDER 500 MM CYCLADES

Glass shelf holder 500 mm, chrome brass wall brackets. Safety frosted glass shelf.
Invisible screws. Solid brass support plate. 2 fixing points per support plate.
Stainless steel screws + hex locking screw and wall plugs included.
Chrome warranty 5 years.

Ref : CYC.2680.53.CHR

## TECHNICAL FEATURES

| | |
|---|---|
| **Dimensions** | 530 x 24 x 134 mm |
| **Materials** | Brass/Safety glass |
| **Finishing** | Chrome / Frosted glass |

Haccess offers you the equipment of your bathroom, shower, mirrors, accessories, hairdryer and complements.
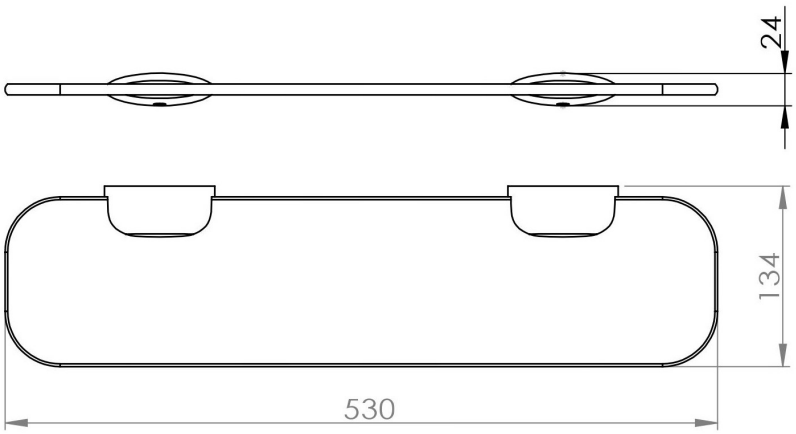
# CYC.2680.53.CHR : GLASS SHELF HOLDER 500 MM CYCLADES