HACCESS®
PERSONNALISE VOTRE HÔTEL

Haccess offers you the equipment of your bathroom, shower, mirrors, accessories, hairdryer and complements.

SMART DUAL LED LIGHTED MIRROR H90 X W60 CM, STEBACKED VERTICAL FROSTED STRIPS, MATTE BLACK FRAME, WITH ANTI-FOG FILM

Smart Dual LED lighted mirror H900 x W600 mm, setbacked vertical frosted strips.
Insulation : class 2, volume 2, IP 44 - 230V - 50/60Hz.
Siliconed monochrome LED strip IP 65, 120 LED/m, 7,7W/m, light output 150 lm/W, ELV (Extra-Low Voltage).
Led strip lifetime : 50 000 hours (guaranteed 25 000 hours).
Color temperature : 3000°K (warm white) or 4000° K (neutral white), CRI 90.
Metal frame, 15/10 thickness, matte black powder-coated.
Edges of the mirror protected.
Delivered fully assembled and ready to fix on the wall with brackets.
With anti-fog film 30W.

The mirror must be connected to power supply via a class2 - IP24 connexion box according to the NFC 15-100 standard (not included).

Ref : SMA.1016.52.60.90.NOI

TECHNICAL FEATURES

Dimensions	600 x 900 x 25 mm
Power	
Materials	Metal / Glass
Finishing	Matte black
Option 1	Without anti-fog film :réf. SMA.1016.42.60.90.NOI

Haccess offers you the equipment of your bathroom, shower, mirrors, accessories, hairdryer and complements.

Option 2	Metal frame finish : polished SS, brushed SS, brushed brass, matte white
Option 3	Color temperature : 2700°K (warm white), 5000°K (cold white), blue, red, green, amber
Source lumineuse	LED
Flux	

Haccess offers you the equipment of your bathroom, shower, mirrors, accessories, hairdryer and complements.
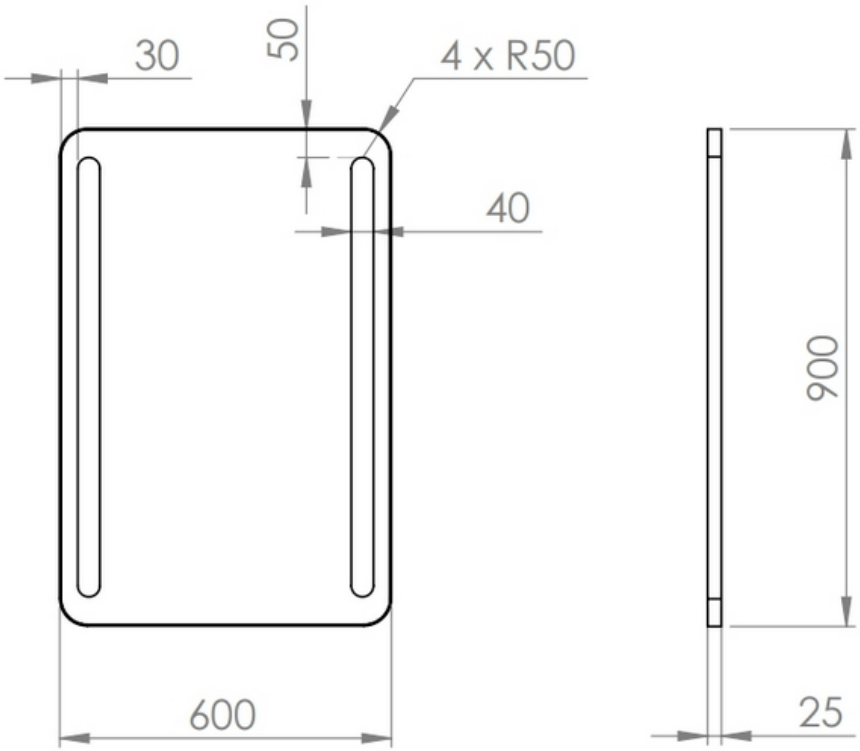
SMA.1016.52.60.90.NOI : SMART DUAL LED LIGHTED MIRROR H90 X W60 CM, STEBACKED VERTICAL FROSTED STRIPS, MATTE BLACK FRAME, WITH ANTI-FOG FILM