Haccess offers you the equipment of your bathroom, shower, mirrors, accessories, hairdryer and complements.

SOAP DISH HOLDER KUBE DARK

Soap dish holder, black epoxy coated brass wall support. Safety frosted glass dish.
20 mm square tube.
Invisible screws. 2/4 fixing points per support plate, oblong holes + hex locking screw.
Black epoxy coated end-pieces and screw covers.
Stainless steel screws and wall plugs included.

Ref : KUB.3561.86.NOI

TECHNICAL FEATURES	
Dimensions	103 x 42 x 117 mm
Materials	Brass/Safety glass
Finishing	Black / Frosted glass

Haccess offers you the equipment of your bathroom, shower, mirrors, accessories, hairdryer and complements.
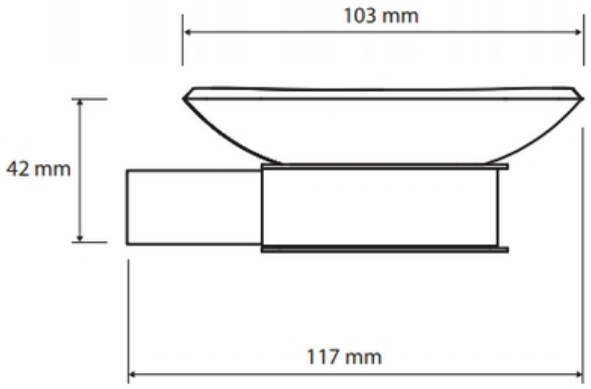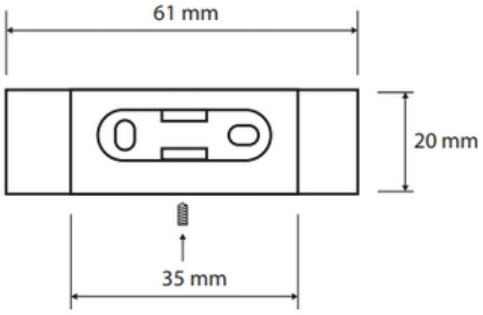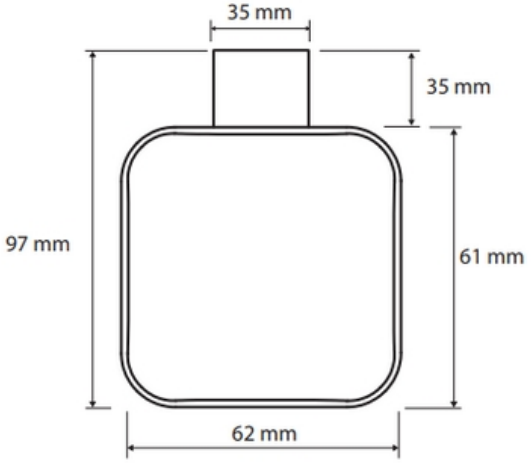
KUB.3561.86.NOI : SOAP DISH HOLDER KUBE DARK