HACCESS®
PERSONNALISE VOTRE HÔTEL

Haccess offers you the equipment of your bathroom, shower, mirrors, accessories, hairdryer and complements.

SINGLE TOILET ROLL HOLDER + COVER ECO

Single toilet roll holder with cover, chrome brass.
Paper roll placed on a centered axis in order to avoid untimely grubbing-up.
Invisible screws.
2 fixing points with hex locking screws.
Stainless steel screws and wall plugs included.

Ref : ECO.011.10.CHR

TECHNICAL FEATURES	
Dimensions	138 x 135 x 55 mm
Materials	Brass
Finishing	Chrome

Haccess offers you the equipment of your bathroom, shower, mirrors, accessories, hairdryer and complements.
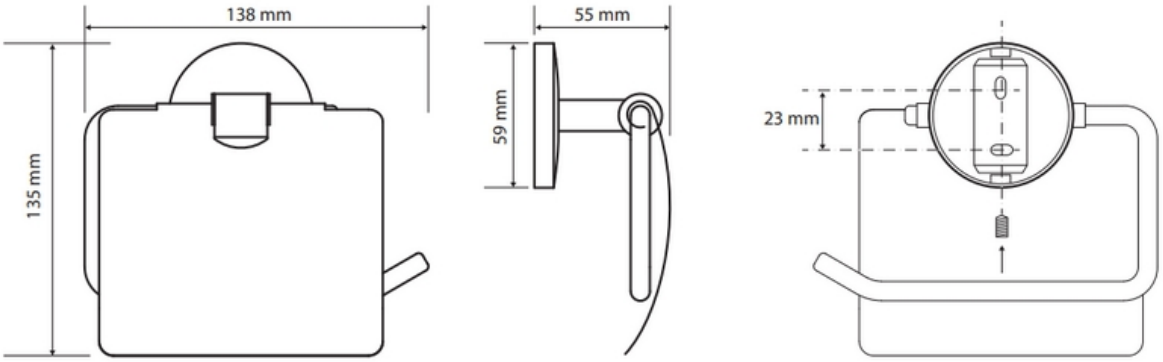
ECO.011.10.CHR : SINGLE TOILET ROLL HOLDER + COVER ECO