HACCESS®
PERSONNALISE VOTRE HÔTEL

Haccess offers you the equipment of your bathroom, shower, mirrors, accessories, hairdryer and complements.

HEATED TOWEL RAIL 4 BARS PREMIUM MEDIUM L525 MM CHROME BRASS, CLASS 2, IP44, 100 W

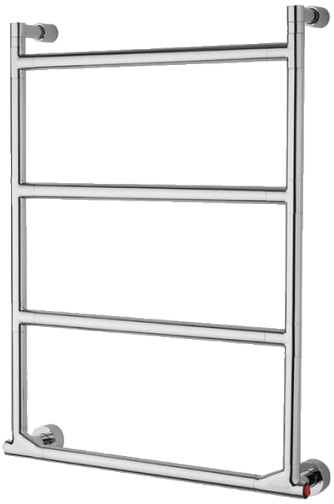

Heated towel rail 4 bars Premium Medium L525 mm with switch, chrome brass.
Tube Ø 25 mm.
Power : 100 W.
Electric connection : On/Off switch.
Electric element : cartridge heater.
Class 2 – IP44.
Weight : 7,6 kg.
Wire length : 1500 mm.

Ref : CONF.PRE.24.4.M.CHR

TECHNICAL FEATURES	
Dimensions	525 x 680 x 100 mm
Between axis	
Power	
Materials	Brass
Finishing	Chrome
Option on request 1	Other surface finishing according to color chart
Option on request 2	Wire and schuko plug
Option on request 3	Progressive temperature selector

Haccess offers you the equipment of your bathroom, shower, mirrors, accessories, hairdryer and complements.
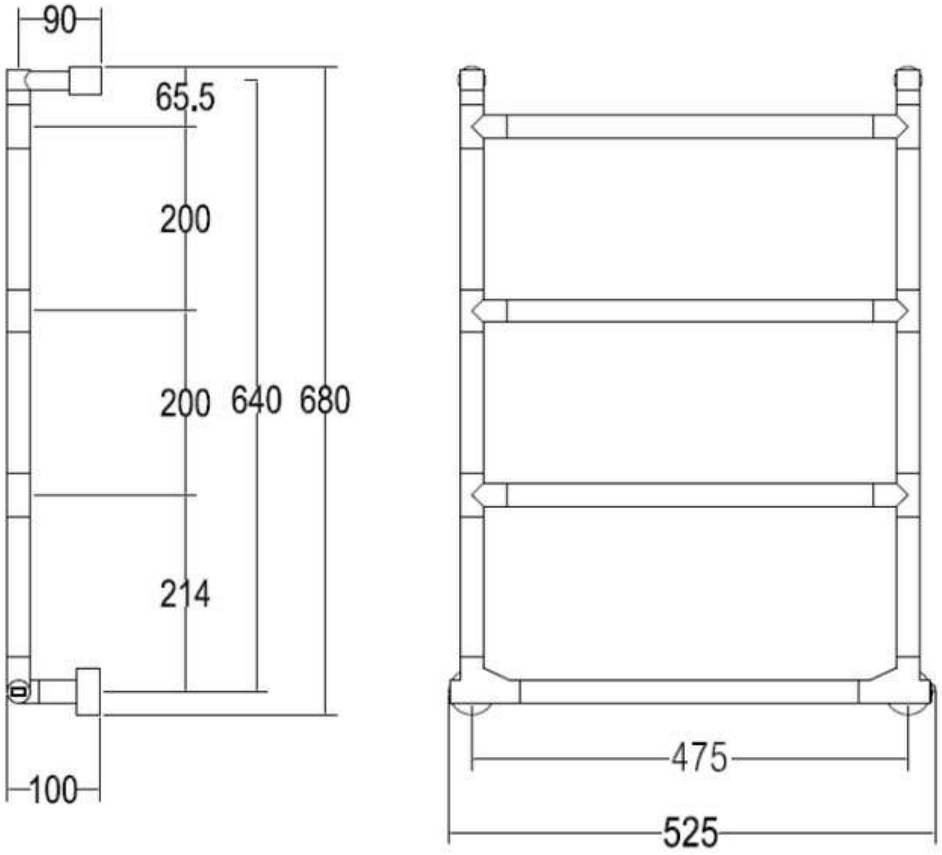
CONF.PRE.24.4.M.CHR : HEATED TOWEL RAIL 4 BARS PREMIUM MEDIUM L525 MM CHROME BRASS, CLASS 2, IP44, 100 W